YidaScan

FM700B-NFC 2D SCANNER

USER MANUAL

About This User Manual

Please read all the content of the user manual carefully to use the products safely and effectively. You are advised of keeping it properly for your using reference.

Disclaimer

Please do not dismantle the product or tear up the seal on it, otherwise we won't provide warranty or replacement service.

The pictures in this user guide are for reference only. If there are any pictures which not match the actual product, please take actual products as the standard. Updated information is subject to change without notice.

All information contained in this guide are protected by copyright, and Shenzhen YIDA Auto-ID Technology Co., Ltd. reserves all rights. All or part of this guide is prohibited to excerpt, copy, bundle other products, or sell without the written permission from us.

Service Information

For technical assistant or product service and repair, please contact YidaScan. Visit our website to learn more: www.yidascan.com

Revision

Version	Description	Date
V1.0	Initial Release	2024.04.20
V1.1	1. Modify "Level Trigger Mode" to only support command setting. 2. Add NFC card support list.	2024.05.22
V1.2	1. Added NFC settings	2024.11.06

Table of Content

Preview 1

Introduction 1

Chapter Description 1

Explanation of Icons 2

Chapter1 About FM700B 3

Introduction 3

Dimension:(mm) 3

Interface 5

12-pin FPC Connector 5

8-PIN Box Connector 6

NFC Types 7

Symbology Chart 8

Chapter2 System Setting 10

Introduction 10

Programming Barcode 10

Use of Programming Barcode 11

Restore to Factory Default 12

Query Firmware Version 12

User Preference 12

Beeper 13

Beeper Volume 13

Power on Beep 13
Enable/Disable Beeper 13
Good Read Beep Duration 14
Error Beep 14
Command-Setup Beep 14
Illumination LED 15
Decode Indicator LED 15
System Upgrade 16
Chapter 3 Scan Mode 17
Sense Mode 17
Sense Mode 17
Decode Session Timeout 17
Set Custom Decode Session Timeout 18
Continuous Scan（default） 18
Reread Timeout 18
Bad Read Message 19
Chapter 4 Interface 21
USB Interface 21
USB HID（default） 21
Function Key Mapping 22
GS Characters Replace 22
Data Upload Method 23

USB Keyboard Transmission Speed 23
Control Character 24
Polling Speed 24
Emulate Keypad 24
CapsLock 25
USB Countries Keyboard 25
USB CDC 27
RS232 27
RS-232 27
RS-485 27
RS-485- Device ID 28
Baud Rate 28
Stop Bit 29
Parity Check 29
Wiegand 31
Wiegand Format 31
NFC 31
NFC On/Off 31
NFC Decode Session Timeout 32
NFC Reread Timeout 33
NFC Data Type 34
NFC Prefix 35

NFC Suffix 35
ISO/IEC 14443 A/B 37
FeliCa 37
NFC Command Mode 37
NFC Command Mode and Data Format 37
NFC Command Mode Write URI Data Command Settings 38
NFC Continuous working time setting 39
Chapter5 Data Format 40
Input/Output Data Format 40
Input Data Format 40
Output Data Format 41
Prefix/Suffix Sequence 41
Custom Prefix 42
Enable/Disable Custom Prefix 42
Set Custom Prefix 43
Custom Suffix 43
Enable/Disable Custom Suffix 43
Set Custom Suffix 44
Code ID 45
Code ID Prefix/Suffix 45
Set Custom Code ID 45
AIM ID 46

Terminator Suffix 46
Convert Case 47
Chapter 6 Symbologies 48
Introduction 48
Enable/Disable 48
Enable/Disable All 1D Barcodes 48
Enable/Disable All 2D Symbologies 50
Inverse Barcode 50
1D Inverse Barcode 50
2D Inverse Barcode 50
EAN-13 51
On/Off 51
Check Digit 51
2 Digit Add-On Code 51
5 Digit Add-On Code 51
ISSN 52
On/Off 52
ISBN 52
On/Off 52
UPC-A 52
On/ Off 52
Check Digit 53

2 Digit Add-On Code 53
5 Digit Add-On Code 53
Numeric System Character 53
UPC-E 55
On/Off 55
Check Digit 55
Convert UPC-E to UPC-A 55
2 Digit Add-on Code 56
5 Digit Add-on Code 56
Numeric System Character 56
Inverse UPC/EAN 56
Code 128/GS1-128 58
Code 128On/ Off 58
Set Length for Code 128 58
Code 128 Variants 58
Inverse Code 128/GS1-128 59
Code 39 59
On/ Off 59
Start/Stop Character 60
Code 39 Full ASCII 60
Inverse Code39 Full ASCII 60
Set Length Range for Code39 61

Code32/Trioptic Code 39 62
Code32 On/ Off 62
Trioptic Code 39 On/ Off 62
Code 93 63
On/ Off 63
Set Length Range for Code 93 63
Inverse Code93 64
Codabar 64
On/ Off 64
Start/Stop Character 64
Check Digit 65
Set Length Range for Codabar 65
Inverse Codabar 66
Interleaved 2 of 5 （ITF5） 66
On/ Off 66
Check Digit 66
Set Length Range for ITF5 67
Inverse ITF5 68
Industrial 2 of 5 68
On/ Off 68
Set Length Range for Industrial 2 of 5 68
Matrix 2 of 5 69

On/ Off 69
Check Digit 69
Set Length Range for Matrix 2 of 5 70
Check Digit 70
Code 11 71
On/ Off 71
Set Length Range for Code 11 71
MSI-Plessey 72
On/ Off 72
Check Digit 72
Set Length Range for MSI-Plessey 74
GS1-DataBar（RSS） 74
RSS-14 On/ Off 74
RSS-Limited On/ Off 75
RSS-Expaned On/ Off 75
Set Length Range for 75
Micro QR Code 76
Micro QR Code 76
Inverse Micro QR Code 76
Mirror Micro QR Code 76
QR Code 77
Inverse QR Code 77

Mirror QR Code 77
QR Code with URL 77
Data Matrix 78
Inverse Data Matrix 78
Mirror Data Matrix 78
DPM 79
PDF417 79
On/ Off 79
Inverse PDF417 79
Micro PDF417 80
Aztec Code 80
Inverse Aztec Code 80
Mirror Aztec Code 81
HANXIN 81
Dot Code 81
Inverse Dot Code 82
Grid Matrix 82
Hong Kong 2 of 5(China Post) 82
NEC 2 of 5 82
Telepen 83
Maxicode 83
Straight 2 of 5 IATA 83

Appendix 83

Appendix 1 Data and Digit Barcodes 83

Appendix 2 Symbologies Table 87

Appendix3 Control Escape Character 89

Appendix 4 ASCII Table 90

Appendix 5 Code ID Table 94

Appendix 6 Prefix/Suffix Control Character Table 97

Preview

Introduction

This manual provides detailed instructions for setting up and using the FM700B scanner.

Chapter Description

《Chapter1 About FM700B》	
《Chapter2 System Setting 》	Introduces three configuration methods and describes how to configure general parameters of the FM700B
《Chapter3 Scan Mode》	Describes different scan modes and relevant parameters.
《Chapter4 Interface》	Describes how to configure different interface parameter
《Chapter5 Data Format》	Describe how to customize scanned data
《Chapter6 Sysmbologies》	Lists all compatible symbologies and describes how to configure the relevant parameters.
《Appendix》	Provides factory defaults table and a bunch of frequently used programming barcodes.

Explanation of Icons

This icon indicates this information requires extra attention from the reader.

This icon indicates handy tips that can help you use or configure the engine with ease.

This icon indicates practical examples that can help you to acquaint yourself with operations.

Chapter1 About FM700B

Introduction

The FM700B NFC is an area image scanner for barcode reading and NFC tags. It includes two illumination LEDs, two Good Read LEDs, one 12-pin FPC connector and two 8-pin box connectors(for USB, RS232, TTL, RS485, Wiegand interfaces).

The FM700B contains:

- 1x CMOS Sensor
- 2x Illumination LED
- 2x Indicator LED

Dimension:(mm)

Front View

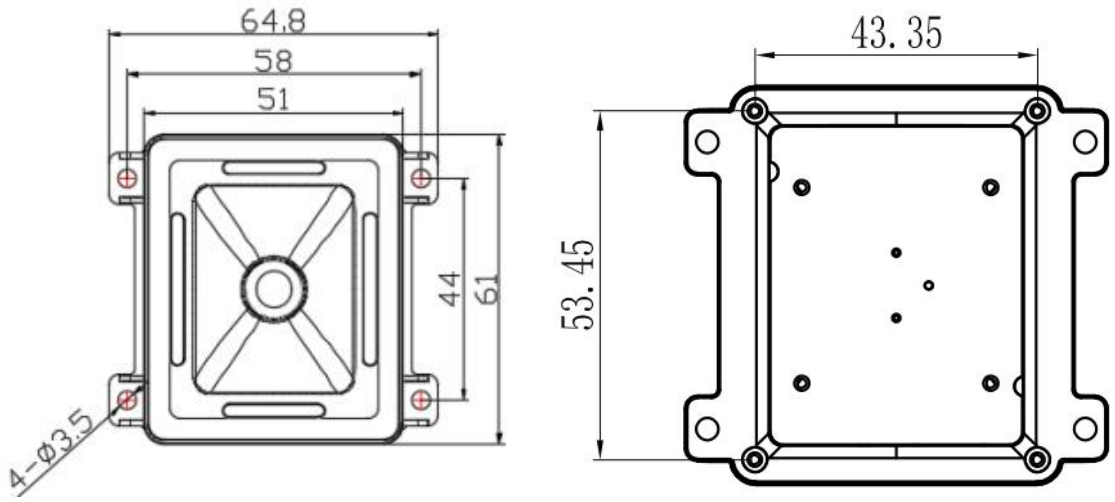

Side View

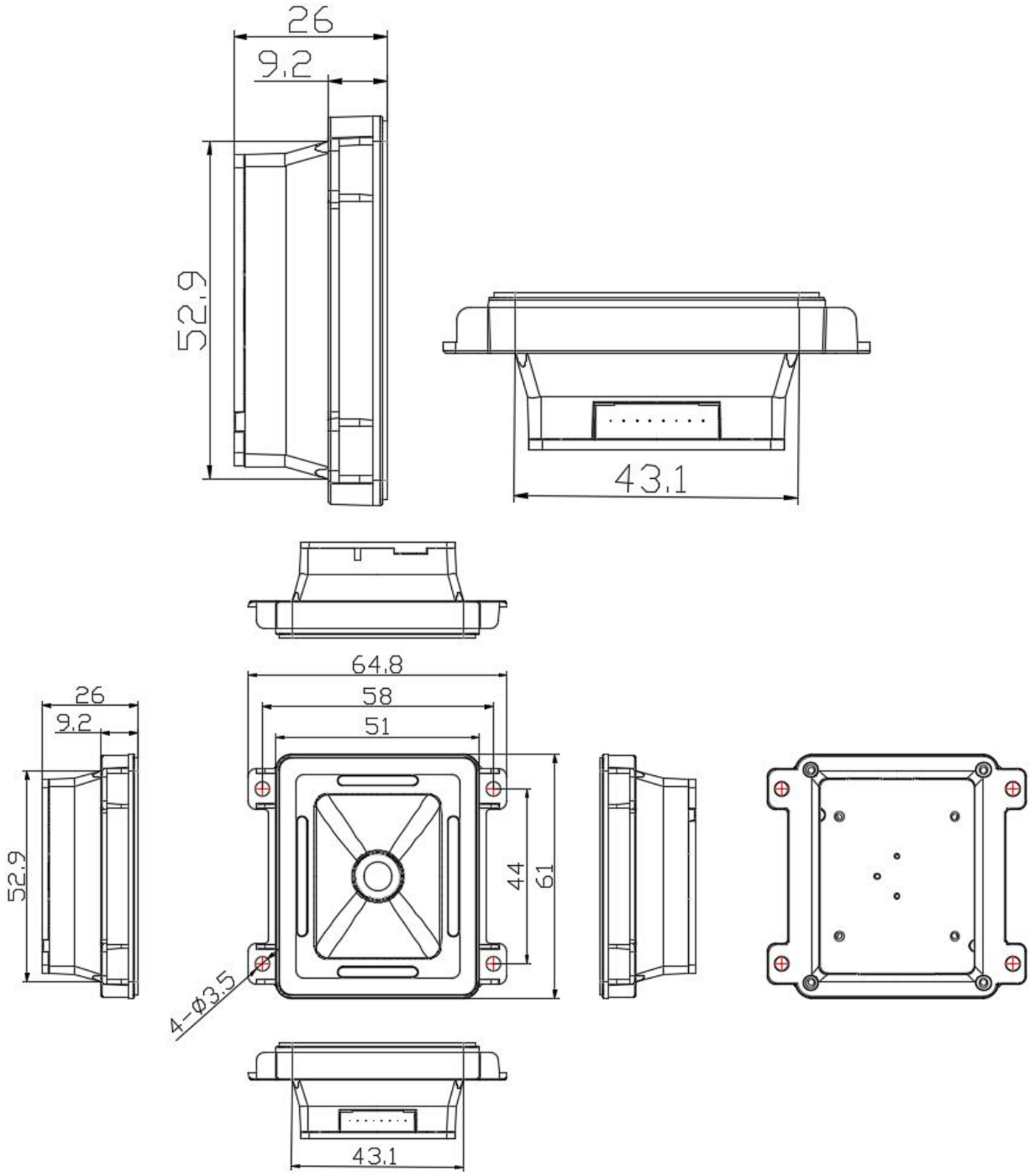

Horizontal:

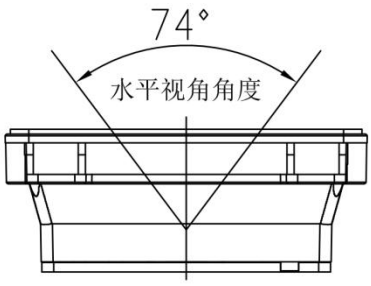

Vertical:

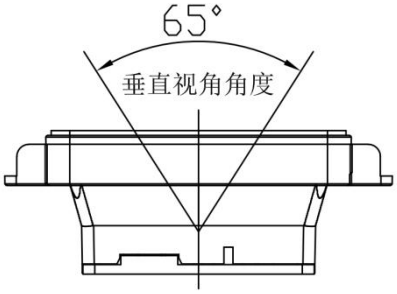

Interface

The physical interface of the FM700B NFC consists of a 12-pin FPC connector and two 8-pin box connectors:

- 12-pin FPC connector can be used as TTL-232 interface or USB interface.

  One 8-pin box connector can be used as standard USB interface and the other as RS-232 interface

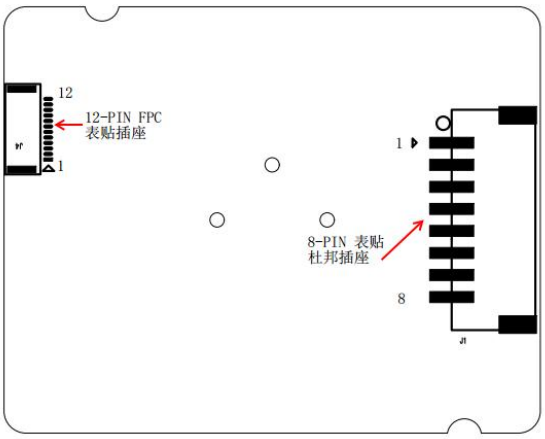

12-pin FPC Connector

PIN#	Sig	I/O	Functio
1	nTRIG	I	Trigger
2	nRESET	I	Reset
3	LED	O	LED
4	Buz	O	Beeper Output
5	PIN 8	-	NULL
6	USB_DP	I/O	USB D+ Signal
7	USB_DN	I/O	USB D- Signal

8	TXD	O	TTL Send
9	RXD	I	TTL Receive
10	GND	-	Ground
11	VIN	-	5V Power Supply
12	NC	-	

8-PIN Box Connector

PIN#	Signal	I/O	Function
1	POW_IN	-	5V Power Supply Input
2	GND	-	Power Supply Ground
3	RS232_RX/RS485_B/WG_DATA1	I/O	RS232-RXD/TTL-232-RXD/RS485B-
4	RS232_TX/RS485_A/WG_DATA0	I/O	RS232-TXD/TTL-232-TXD/RS485A-
5	USB_DP	I/O	USB_D+ Signal
6	USB_DN	I/O	USB_D- Signal
7	LED	O	LED
8	nTRIG	I	Trigger

NFC Types

Standard	Type	Card Type
ISO 14443A	Type 1 Tag	Topaz 512
ISO 14443A	Type 2 Tag	Mifare ultralight NTAG216
ISO 14443A	Type 2 Tag	Mifare ultralight-C
ISO 14443A	Type 2 Tag	NTAG215
ISO 14443A	Type 2 Tag	Mifare UL
ISO 14443A	Type 2 Tag	NTAG213
ISO 14443A	Type 2 Tag	NTAG203
ISO 14443B	Type 4 Tag	Type B
ISO 14443A	Type 4 Tag	Mifare DESFIRE EV1 2K
ISO 14443A	Type 4 Tag	Mifare DESFIRE D42
ISO 14443A	Type 4 Tag	Mifare DESFIRE D82
ISO 14443A	Type 7 Tag	Mifare plus 4k（X）
ISO 14443A	Type 7 Tag	Mifare plus 4k（S）
ISO 14443A	Type 7 Tag	Mifare S50
ISO 14443A	Type 7 Tag	Mifare S50
ISO 14443A	Type 7 Tag	Mifare S70
ISO 14443A	Type 7 Tag	Mifare S70

Symbology Chart

Type	Barcode Type	Support	Default On
1D	Codabar	√	×
	Code 11	√	×
	Code 128	√	√
	ISBT 128	√	√
	GS1 128	√	√
	Code 32	√	×
	Code 39	√	√
	Trioptic Code 39	√	×
	Code 93	√	√
	EAN-8	√	√
	EAN-13	√	√
	ISBN	√	√
	ISSN	√	√
	GS1 DataBar	√	×
	GS1 DataBar Limited	√	×
	GS1 DataBar Expanded	√	×
	GS1 DataBar Stacked	√	×
	GS1 Composite	×	×
	Hong Kong 2 of 5(China post)	√	×
	Interleaved 2 of 5	√	×
	Industrial 2 of 5	√	×
	Matrix 2 of 5	√	×
	NEC 2 of 5	√	×
	Straight 2 of 5 IATA	√	×
	MSI Plessey	√	×
	Plessey	×	×
	UPC-A	√	√
	UPC-E0	√	√
	UPC-E1	√	×
	Telepen	√	×

Type	Barcode Type	Support	Default On
2D	Aztec Code	√	×
	HANXIN	√	×
	Codablock A	√	×
	Codablock F	√	×
	Data Matrix Code（DPM）	√	×
	Maxicode	√	×
	PDF417	√	×
	Micro PDF417	√	×
	QR Code	√	√
	Micro QR Code	√	√
	DOT Code	√	×
	Grid Matrix Code	√	×
	USPS 4-State Customer Barcode	×	×

Chapter2 System Setting

Introduction

The FM700B can be configured by scanning programming barcodes. All user programmable features/options are described along with their programming barcodes/commands in the following sections. This programming method is most straightforward.

Programming Barcode

The figure above is an example that shows you the programming barcode：

1.The programming barcode.

2.The description of feature/option.

Use of Programming Barcode

Scanning the Enter Setup barcode can enable the scanner to enter the setup mode. Then you can scan a number of programming barcodes to configure your scanner. To exit the setup mode, scan the Exit Setup barcode or a non-programing barcode, or reboot the scanner

Enter Setup（default）

Exit Setup

Restore to Factory Default

Restore to factory default

Factory Default- Inverse Code

Query Firmware Version

Query Firmware Version

User Preference

User can set up his/her preference of the scanner.

Save User Preference

Restore to User Preference

Beeper

Beeper Volume

This setting is only for "Good Read Beep Volume" and "Error Beep Volume"

High Volume（default）

Low Volume

Power on Beep

On（default）

Off

Enable/Disable Beeper

This setting is only for "Good Read Beep" and "Error Beep"

Enable（default）

Disable

Good Read Beep Duration

This setting is only for **Good Read Beep**. The default value is 80ms.

Short（40ms）

Long(80ms) (Default)

Error Beep

On（default）

Off

Command-Setup Beep

On（default）

Off

Illumination LED

Normal（default）

Noted: In sense mode, the illumination led must be in normal mode, and the state of the illumination led cannot be changed (FM700B (NFC) only).

Always on

Always Off

Decode Indicator LED

On（default）

Off

System Upgrade

Please connect the scanner with a USB cable for firmware upgrade.

Firmware Upgrade

Example

Steps to upgrade firmware:

1.Plug the scanner with a USB cable;

2. Scan Firmware Upgrade barcode to enter USB driver mode and wait for USB driver showing up on the computer;

3.Copy the firmware file into the USB driver;

4. Eject the USB driver and replug the usb cable to restart up the scanner and the scanner will start the firmware upgrade procedure.

5.The scanner beeps after firmware upgrading.

ATT

If the upgrade is successful, the factory settings will be restored, and users can reset the scanner according to their needs.

If the upgrade fails, you need to re-power on and restart the scanner and perform the above upgrade steps again.

Chapter 3 Scan Mode

Sense Mode

Sense Mode

The scanner activates a decode session every time it detects a barcode presented to it. The decode session continues until a barcode is decoded or the decode session timeout expires. Reread Timeout can avoid undesired rereading of same barcode in a given period of time.

Sense Mode

Noted: In sense mode, the illumination led must be in normal mode, and the state of the illumination led cannot be changed (FM700B (NFC) only).

Decode Session Timeout

This parameter sets the maximum time decode session continues during a scan attempt.The Short, Medium, Long represent 3s, 7s, 10s. The default value is 3s.

Short（default）

Medium

Long

Enable Custom Decode Session Timeout

Set Custom Decode Session Timeout

It's programmable in 0.1s increments from 1 to 999. The default setting is 3s.

Set Custom Decode Session Timeout

Example

Set the decode session timeout to 10s:

1、Scan **Set Custom Decode Session Timeout** Barcode

2、Scan the numeric barcodes："1""0" from the "Digital barcodes" section in Appendix1.

3、Scan the **Save** barocde in Appendix1

Continuous Scan（default)

The scanner automatically starts one decode session after another. Reread Timeout can avoid undesired rereading of same barcode in a given period of time

Continuous Scan（default)

Reread Timeout

Reread Timeout can avoid undesired rereading of same barcode in a given period of time.

This feature is only applicable to the Sense and Continuous modes.

It's programmable from 0 to 65535ms，500ms is the default value.

0 ms

500ms (default)

1s

Set Custom Reread Timeout

Bad Read Message

Scan the appropriate barcode below to select whether or not to send a bad read message (user-programmable) when a good read does not occur before trigger release, or the decode session timeout expires, or the engine receives the Stop Scanning command.

The default setting is "NG"

On

Off (default)

Set Bad Read Message

Chapter 4 Interface

USB Interface

USB HID (default)

USB HID

Function Key Mapping

Enable

Disable（default）

GS Characters Replace

Do Not Replace（default）

Replace with Ç

Replace with |

Replace with ^]

Replace with]

Replace with <GS>

Replace with (GS)

Data Upload Method

Software

Keyboard（default）

Both Software and Keyboard

USB Keyboard Transmission Speed

5 s(default)

10 s

20 ms

Set Custom Speed

Control Character

Off（default）

Control + ASCII Mode（Ctrl+ASCII）

Alt + Keypad Mode（Alt+Keypad）

Polling Speed

1ms

5ms（**default**）

10ms

Set Custom Polling Speed

Emulate Keypad

Number output through Keypad

Off

On（default）

"+""-""*""/" Output through Keypad

Off（default）

On

CapsLock

On

Off（default）

USB Countries Keyboard

America（English）(default)

Italian(Italy)

Spanish(Spain)

Portuguese (Portugal)

Portuguese (Brazil)

French(France)

French(Belgium)

German(Austria)

German(Swiss)

Turkish Q

Turkish F

English(UK)

Japanese(Japan)

Italian (Italy) cannot output "~"
Portuguese (Brazil) does not output "?" and "/"
Japanese (Japan) needs to be switched to English

USB CDC

If your engine is connected to the USB port on a host device, the USB CDC feature allows the host device to receive data in the way as a serial port does. A driver is needed when using this feature. You may download it from our website at www.yidascan.com

USB CDC

RS232

RS-232

When the scanner is connected to the RS-232 port of a host device, you need to set communication parameters (including baud rate, parity check, data bit and stop bit) on the scanner to match the host device so that two devices can communicate with each other.

RS-232

RS-485

Switch to RS-485 Interface

RS-485- Device ID

Default device ID value is 0x00.

Set Device ID

Example

Set RS485 Device ID as 0x01:

2.Scan **Set Device ID** barocde.

3.Scan numeric barcode"**0**""**1**" from the Digit Barcodes in appendix 1.

4.Scan **Save** barcode in appendix 1.

Baud Rate

Baud rate is the number of bits of data transmitted per second. Set the baud rate to match the host requirements.

Baud Rate

Baud Rate 4800

Baud Rate 9600 (default)

Baud Rate 19200

Baud Rate 38400

Baud Rate 57600

Baud Rate 115200

Stop Bit

Stop Bit 1 (default)

Stop 2

Parity Check

Set the parity type to match the host requirements.

Odd Parity: If the data contains an odd number of 1 bits, the parity bit value is set to 0.

Even Parity: If the data contains an even number of 1 bits, the parity bit value is set to 0.

None: Select this option when no parity bit is required.

The stop bit(s) at the end of each transmitted character marks the end of transmission of one character and prepares the

receiving device for the next character in the serial data stream. Set the number of stop bits to match the host requirements.

No Parity Check（Default）

Odd Parity

Even Parity

Wiegand

Wiegand Interface

Wiegand Format

Wiegand 26（default）

Wiegand 32

Wiegand 34

NFC

NFC On/Off

Off

On（default）

NFC Decode Session Timeout

This parameter sets the maximum time decode session continues during a NFC scan attempt. The default value is 50ms. Setup range is : 10ms~1000ms.

50ms（default）

1000ms

Set Custom NFC Decode Session Timeout

Example

Set Custom NFC Decode Session Timeout to 12ms：

1.Scan **Enter Setup** barcode.

2.Scan **Set Custom NFC Decode Session Timeout** barcode

3.Scan numeric barcodes **"1""2"** from appendix 1

4.Scan **Save** barcode

5.Scan **Exit Setup** barcode.

NFC Reread Timeout

Reread Timeout can avoid undesired rereading of same NFC Tag in a given period of time.

It's programmable from 0 to 60000ms，500ms is the default value.

500ms（default）

2000ms

5000ms

Set custom NFC Reread Timeout

Example

Set Custom NFC Reread Timeout to 1000ms：

1.Scan **Enter Setup** barcode.

2.Scan **Set Custom NFC Reread Timeout** barcode.

3.Scan numeric barcodes **"1""0""0""0"** from appendix 1.

4.Scan **Save** barcode.

5.Scan **Exit Setup** barcode.

NFC Data Type

NFC UID：Only output UID data.

NFC Detailed data(automatic): Output card details, may contain NDEF data.

NFC detailed data(mandatory): Detailed data of the output card, must contain NDEF data.

Detailed data contains: card type, card UID, card NDEF data, data format is as follows (X indicates corresponding data):

{"tag":{"uid":"XXX","uid_len":X,"techlogy":"XXX Classic"},"ndef":{"max_length":X,"current__length":X,"language":"X","type":"X","content":"X"}}

UID Data（default）

Detailed data（automatic）

Detailed data（mandatory）

NFC Prefix

All NFC use one same prefix, setup range 1~11 characters.

ATT

Modify the user-defined prefix, after saved, the data of the previous prefix is cleared.

Disable（default）

Enable

Modify NFC Prefix

Example

Modify NFC prefix to ‘a’(a HEX value: 0x61)

1. Scan **Enter Setup** barcode.
2. Scan **Modify NFC Prefix** barcode.
3. ASCII character for “a” is 0x61 after checking appendix 5.
4. Scan digital barcodes **“6””1”** in the appendix 1.
5. Scan **Save** barcode.
6. Scan **Exit Setup** barcode.

After setting, as long as the "NFC Custom Prefix" is set to "On", the prefix "a" will be added to the decoded data.

NFC Suffix

All NFC data share a common suffix data, definable length range 1~11 characters.

ATT When a custom suffix is saved, the last suffix data is cleared.

Disable (default)

Enable

Modify NFC Suffix

Example Modify NFC suffix to 'a'(a HEX value: 0x61)

1. Scan **Enter Setup** barcode.
2. Scan **Modify NFC Suffix** barcode.
3. ASCII character for "a" is 0x61 after checking appendix 5.
4. Scan digital barcodes **"6""1"** in the appendix 1.
5. Scan **Save** barcode.
6. Scan **Exit Setup** barcode.

After setting, as long as the "NFC Custom Suffix" is set to "On", the suffix "a" will be added to the decoded data.

ISO/IEC 14443 A/B

Reads ISO/IEC 14443 Class A/B NFC cards for read mode reading.

Enable ISO/IEC 14443 A/B Types（default)

Disable ISO/IEC 14443 A/B Types

FeliCa

Reads ISO/IEC 14443 Class A/B NFC cards for read mode reading.

Enable FeliCa（default)

Disable FeliCa

NFC Command Mode

Control the type of NFC card and data read by the device through commands, currently adapted to ISO/IEC 14443 class A/B and FeliCa class cards, only effective in NFC command mode, detailed settings can be referred to the "Programming Instruction Manual".

NFC Command Mode and Data Format

Control the device to write the type of NFC card and text data etc. through commands, currently adapted to ISO/IEC 14443 class A/B and FeliCa class cards, only valid in NFC

command mode, detailed settings can be found in the "Programming Command Manual".

ATT

Send NFC write command first, then put in NFC card to write data normally. NFC card needs to support NDEF format, otherwise it can't be written.

NFC Command Mode Write URI Data Command Settings

Control the device to write NFC card type and URI data etc. through commands, currently adapts to ISO/IEC 14443 Class A/B and FeliCa cards, only valid in NFC command mode, detailed settings can be found in the Programming Command Manual.

ATT

Send NFC write command first, then put in NFC card to write data normally. NFC card needs to support NDEF format, otherwise it can't be written.

NFC Command Mode Analog Card Access Settings

Through the command to control the device to write the type of NFC card and UID data, etc., automatically exit the analog card after restarting, the scanner into the analog card can not perform other NFC command operations (in addition to the analog card to exit the setup), the current can only simulate the card ISO/IEC 14443 class A and FeliCa class card, does not support the NDEF data simulation, only in the NFC command mode is effective, the detailed setup can be seen in the "Programming Instruction Manual".

NFC Command Mode Analog Card Exit Setup

Need to exit the analog card to perform other NFC operations, only valid in NFC

command mode, detailed settings can be found in the Programming Command Manual.

NFC Continuous working time setting

The unit is second (s), the time range can be set: 0~60 seconds, the default is 10 s. NFC will continue to work for a period of time after receiving the read command operation, to prevent the next command operation NFC needs to be cold-started, resulting in a decline in the performance of the card reading, the detailed settings can be referred to the "Programming Command Manual".

Chapter5 Data Format

Input/Output Data Format

Input Data Format

Automatic: recognition of UTF-8 and GBK barcodes;

UTF-8 encoding: recognizes only UTF-8 barcodes;

GBK encoding: recognize GBK barcode only.

Auto（default）

UTF-8

GBK

Output Data Format

Original Format

UTF-8

GBK（default)

Valid for USB CDC serial port, RS-232 serial port, RS-485 serial port and HID POS interface only.

Prefix/Suffix Sequence

Code ID+Prefix+AIM ID+Barcode+Suffix+Terminator（default)

Prefix+Code ID+AIM ID+Barcode+Suffix+Terminator

Custom Prefix

Enable/Disable Custom Prefix

If custom prefix is enabled, you are allowed to append to the data a user-defined prefix that cannot exceed 10 characters.

For example, if the custom prefix is "AB" and the barcode data is "123", the Host will receive "AB123".

Enable Custom Prefix

Disable Custom Prefix（default）

Set Custom Prefix

To set a custom prefix, scan the Set Custom Prefix barcode then the numeric barcodes corresponding to the hexadecimal

value of a desired prefix then the Save barcode.

Set Custom Prefix

Example

Set the custom prefix (HEX:0x61) to "a" for all symbolgoies(Code ID: 0x99)

1.Scan Set Custom Prefix barcode.

2.Scan numeric barcode "9""9""6""1" from the digit barcode section in appendix 1.

3.Scan Save barcode in the appendix 1.

4.Scan Enable Custom Prefix barcode.

Custom Suffix

Enable/Disable Custom Suffix

If custom suffix is enabled, you are allowed to append to the data a user-defined suffix that cannot exceed 10 characters.

For example, if the custom suffix is "AB" and the barcode data is "123", the Host will receive "123AB".

Enable Custom Suffix

Disable Custom Suffix（default）

Set Custom Suffix

Set Custom Suffix

Example

Set the custom suffix (HEX:0x61) to "a" for all symbolgoies(Code ID: 0x99)

1.Scan **Set Custom Suffix** barcode.

2.Scan numeric barcode **"9""9""6""1"** from the digit barcode section in appendix 1.

3.Scan **Save** barcode in the appendix 1.

4.Scan **Enable Custom Suffix** barcode.

Code ID

Code ID can also be used to identify barcode type. Code ID can only consist of one letters.

Code ID Prefix/Suffix

Disable Code ID（default)

Enable Code ID

Set Custom Code ID

Restore Code ID

Set Custom Code ID

Set Custom Code ID

Example

Set Codabar（Code ID:0x61） Code ID to "Y"（Hex: 0x59）:

1. Scan **Set Custom Code ID** barcode.
2. Scan numeric barcode **"6""1""5""9"** from the digit barcodes section in the appendix 1
3. Scan **Save** barcode in the appendix 1

AIM ID

AIM (Automatic Identification Manufacturers) ID defines symbology identifier (For the details, see the "AIM ID Table"

section in Appendix). If AIM ID prefix or suffix is enabled, the engine will add the symbology identifier before or after the scanned data after decoding.

Disable AIM ID（default）

Enable AIM ID

Terminator Suffix

Set Terminator Suffix to CR（default）
（Carriage Return）

Set Terminator Suffix to LF
（Line Feed）

Set Terminator Suffix to CRLF
（Carriage Return+Line Feed）

Set Terminator Suffix to TAB

Set Terminator Suffix to ETX

Disable Terminator Suffix

Convert Case

No Case Conversion（default）

Convert the Case

Convert All to Upper Case

Convert All to Lower Case

Chapter 6 Symbologies

Introduction

Every symbology (barcode type) has its own unique attributes. This chapter provides programming barcodes for configuring the engine so that it can identify various symbologies. It is recommended to disable those that are rarely used to increase the efficiency of the scanner.

Enable/Disable

If the Disable All Symbologies feature is enabled, the engine will not be able to read any non-programming barcodes except the programming barcodes.

Enable All Symbologies

Disable All Symbologies

Restore All Symbologies

Enable/Disable All 1D Barcodes

Enable All 1D Barcodes

Disable All 1D Barcodes

Restore All 1D Barcodes

Enable/Disable All 2D Symbologies

Enable All 2D Symbologies

Disable All 2D Symbologies

Restore All 2D Symbologies

Inverse Barcode

1D Inverse Barcode

Only Decode Regular 1D Barcodes (default)

Decode Regular and Inverser 1D Barcodes

2D Inverse Barcode

Only Decode Regular 2D Barcodes (default)

Decode Regular and Inverser 2D Barcodes

EAN-13

On/Off

EAN13 On（Default）

EAN13 Off

Check Digit

Transmit EAN13 Check Digit（Default）

Do not Transmit EAN13 Check Digit

2 Digit Add-On Code

Enable

Disable（Default）

5 Digit Add-On Code

Enable

Disable（Default）

ISSN

On/Off

ISSN On

ISSN Off（Default）

ISBN

On/Off

ISBN On

ISBN Off（Default）

UPC-A

On/ Off

UPC-AOn（Default）

UPC-A Off

Check Digit

Transmit UPC-A Check Digit（Default）

Do not Transmit UPC-A Check Digit

2 Digit Add-On Code

On

Off（Default）

5 Digit Add-On Code

On

Off（Default）

Numeric System Character

The numeric system character is the first digit of UPC-A

On（Default）

Off

UPC-E

On/Off

UPC-E0 On（default)

UPC-E0 Off

UPC-E1 On

UPC-E1 Off（Default)

Check Digit

OnUPC-E Check Digit（Default)

OffUPC-E Check Digit

Convert UPC-E to UPC-A

Convert UPC-E to UPC-A

Do not Convert UPC-E to UPC-A Default)

ATT

Note whether the check digit, additional code, and numeric system character are On, otherwise the data length may be wrong.

2 Digit Add-on Code

Decode 2 Digit Add-On Code

Do not Decode 2 Digit Add-On Code (Default)

5 Digit Add-on Code

Decode 5 Digit Add-On Code

Do not Decode 5 Digit Add-On Code (Default)

Numeric System Character

The numeric system character is the first digit of UPC-E

Transmit Numeric System Character (Default)

Do not Transmit Numeric System Character

Inverse UPC/EAN

Include Inverse UPC-A, UPC-E0, UPC-E1, EAN8, EAN13.

Only Decode Normal UPC/EAN Barcodes (Default)

Decode Both Inverse and Regular UPC/EAN Barcodes.

Code 128/GS1-128

Code 128On/ Off

Code128 On（Default)

Code128 Off

Set Length for Code 128

Set the Minimum Length

Set the Maximum Length

Code 128 Variants

GS1-128 On（Default)

GS1-128 Off

Codablock F On

Codablock F Off（Default)

Inverse Code 128/GS1-128

Only Decode Regular Barcode（Default）

Decode both Regular and Inverse Barcodes

Code 39

On/ Off

Code39 On（Default）

Code39 Off

Start/Stop Character

Transmit Start/Stop Character

Do not Transmit Start/Stop Character (Default)

Code 39 Full ASCII

On

Off（Default)

Inverse Code39 Full ASCII

Only Decode Regular Barcode（Default)

Decode both Regular and Inverse Barcodes

Set Length Range for Code39

Set Minimum Length for Code39

Set the Maximum Length for Code39

Example

Set the scanner to decode Code39 containing between 8 and 12 characters:

1. Scan **Set the Minimum Length** barcode.
2. Scan numeric barcode "**8**" from the digit barcode in the appendix 1.
3. Scan **Save** barcode in the appendix 1.
4. Scan **Set the Maximum Length** barcode.
5. Scan numeric barcodes "**1""2**" from the Digit Barcode in the appendix 1.
6. Scan **Save** barcode in the appendix 1.

Code32/Trioptic Code 39

Code32 On/ Off

Code32 On

Code32 Off (Default)

ATT Inverse Code32 is not available.

Trioptic Code 39 On/ Off

Trioptic Code 39 is a fixed-length code, the data length is fixed at 6 (without start and stop characters), and the data will be output in reverse order.

Example: Trioptice Code 39 barcode data is "123456", then the output data is "456123".

Trioptic Code 39On

Trioptic Code 39 Off (Default)

Code 93

On/ Off

Code93 On（Default）

Code93 Off

Set Length Range for Code 93

Set the minimum Length for Code93

Set the Maximum Length for Code93

Example

Set the scanner to decode Code93 containing between 8 and 12 characters:

1. Scan Set the Minimum Length barcode.
2. Scan numeric barcode "8" from the digit barcode in the appendix 1.
3. Scan Save barcode in the appendix 1.
4. Scan Set the Maximum Length barcode.
5. Scan numeric barcodes "1""2" from the Digit Barcode in the appendix 1.
6. Scan Save barcode in the appendix 1.

Inverse Code93

Only Decode Regular Barcode（Default）

Decode both Regular and Inverse Barcodes

Codabar

On/ Off

Codabar On（Default）

Codabar Off

Start/Stop Character

Transmit Codabar Start/Stop Character

Do not Transmit Codabar Start/Stop Character（Default）

Check Digit

Off (Default)

On

Enable and Transmit Codabar Check digit

Set Length Range for Codabar

Set the Minimum Length

Set the Maximum Length

Example

Set the scanner to decode Codabar containing between 8 and 12 characters:

1. Scan **Set the Minimum Length** barcode.
2. Scan numeric barcode "**8**" from the digit barcode in the appendix 1.
3. Scan **Save** barcode in the appendix 1.
4. Scan **Set the Maximum Length** barcode.
5. Scan numeric barcodes "**1""2**" from the Digit Barcode in the appendix 1.
6. Scan **Save** barcode in the appendix 1.

Inverse Codabar

Only Decode Regular Barcode（Default）

Decode both Regular and Inverse Barcodes

Interleaved 2 of 5 （ITF5）

On/ Off

Interleaved 2 of 5（ITF5）On

Interleaved 2 of 5（ITF5） Off（Default）

Check Digit

Disable ITF5 Check Digit （Default）

Enable ITF5 Check Digit

Enable and Transmit ITF5 Check Digit

Set Length Range for ITF5

ITF-6: One of the variant of Interleaved 2 of 5 (ITF5), after Enable ITF-6, the length range of ITF5 will be fixed to 6.

ITF-14: One of the variant of Interleaved 2 of 5 (ITF5), after Enable ITF-614, the length range of ITF5 will be fixed to 14.

Set the Minimum Length Range

Set the Maximum Length

Enable ITF-6

Enable ITF-14

Example

Set the scanner to decode ITF5 containing between 8 and 12 characters:

1. Scan **Set the Minimum Length** barcode.
2. Scan numeric barcode "**8**" from the digit barcode in the appendix 1.
3. Scan **Save** barcode in the appendix 1.
4. Scan **Set the Maximum Length** barcode.
5. Scan numeric barcodes "**1""2**" from the Digit Barcode in the appendix 1.
6. Scan **Save** barcode in the appendix 1.

Inverse ITF5

Only Decode Regular Barcode（Default）

Decode both Regular and Inverse Barcodes

Industrial 2 of 5

On/ Off

Industrial 2 of 5 On

Industrial 2 of 5 Off（Default）

Set Length Range for Industrial 2 of 5

Set the minimum Length

Set the Maximum Length

Example

Set the scanner to decode Industrial 2 of 5 containing between 8 and 12 characters:

1. Scan **Set the Minimum Length** barcode.

2. Scan numeric barcode "**8**" from the digit barcode in the appendix 1.

3. Scan **Save** barcode in the appendix 1.

4. Scan **Set the Maximum Length** barcode.

5. Scan numeric barcodes "**1""2**" from the Digit Barcode in the appendix 1.

6. Scan **Save** barcode in the appendix 1.

Matrix 2 of 5

On/ Off

Matrix 2 of 5 On

Matrix 2 of 5 Off (Default)

Check Digit

Disable Matrix 2 of 5 Check Digit (Default)

Enable Matrix 2 of Check Digit

Enable and Transmit Matrix 2 of Check Digit

Set Length Range for Matrix 2 of 5

Set the Minimum Length

Set the Maximum Length

Example

Set the scanner to decode Matrix 2 of 5 containing between 8 and 12 characters:

1. Scan **Set the Minimum Length** barcode.
2. Scan numeric barcode "**8**" from the digit barcode in the appendix 1.
3. Scan **Save** barcode in the appendix 1.
4. Scan **Set the Maximum Length** barcode.
5. Scan numeric barcodes "**1""2**" from the Digit Barcode in the appendix 1.
6. Scan **Save** barcode in the appendix 1.

Check Digit

Disable Matrix 2 of 5 Check Digit (Default)

Enable Matrix 2 of 5 Check Digit

Enable and Transmit Matrix 2 of 5 Check Digit

Code 11

On/ Off

Code 11 On

Code 11 Off (Default)

Set Length Range for Code 11

Set the Minimum Length

Set the Maximum Length

Example

Set the scanner to decode Code 11 containing between 8 and 12 characters:

1. Scan Set the Minimum Length barcode.
2. Scan numeric barcode "8" from the digit barcode in the appendix 1.
3. Scan Save barcode in the appendix 1.
4. Scan Set the Maximum Length barcode.
5. Scan numeric barcodes "1""2" from the Digit Barcode in the appendix 1.
6. Scan Save barcode in the appendix 1.

MSI-Plessey

On/ Off

MSI-Plessey On

MSI-Plessey Off（Default）

Check Digit

Disable MSI-Plessey Check Digit

Enable MSI-Plessey 1 Digit Check Digit - MOD 10（Default）

Enable MSI-Plessey 2 Digit Check Digit MOD 10/MOD 11

Enable MSI-Plessey 2 Digit Check Digit MOD 10/MOD 10

Enable but do not transmit MSI-Plessey 2 Digit Check Digit MOD 10/MOD 11

Enable but do not transmit MSI-Plessey 2 Digit Check Digit MOD 10/MOD 10

Set Length Range for MSI-Plessey

Set the Minimum Length

Set the Maximum Length

Example

Set the scanner to decode MSI-Plessey containing between 8 and 12 characters:

1. Scan **Set the Minimum Length** barcode.
2. Scan numeric barcode "**8**" from the digit barcode in the appendix 1.
3. Scan **Save** barcode in the appendix 1.
4. Scan **Set the Maximum Length** barcode.
5. Scan numeric barcodes "**1""2**" from the Digit Barcode in the appendix 1.
6. Scan **Save** barcode in the appendix 1.

GS1-DataBar (RSS)

RSS-14 On/ Off

RSS-14 On

RSS-14 Off (Default)

RSS-Limited On/ Off

RSS-Limited On

RSS-Limited Off (Default)

RSS-Expaned On/ Off

RSS-Expaned On

RSS-Expaned Off (Default)

Set Length Range for

Set the Minimum Length

Set the Maximum Length

Example

Set the scanner to decode RSS-Expaned containing between 8 and 12 characters:

1. Scan **Set the Minimum Length** barcode.

2. Scan numeric barcode "**8**" from the digit barcode in the appendix 1.

3. Scan **Save** barcode in the appendix 1.

4. Scan **Set the Maximum Length** barcode.

5. Scan numeric barcodes "1""2" from the Digit Barcode in the appendix 1.

6. Scan Save barcode in the appendix 1.

Micro QR Code

Micro QR Code

On

Off（Default）

Inverse Micro QR Code

On

Off（Default）

Mirror Micro QR Code

On（Default）

Off

QR Code

On（Default）

Off

Inverse QR Code

On

Off（Default）

Mirror QR Code

On（Default）

Off

QR Code with URL

On（Default）

Off

Data Matrix

On（Default）

Off

Inverse Data Matrix

On

Off（Default）

Mirror Data Matrix

On

Off（Default）

DPM

DPM On

DPM Off (Default)

PDF417

On/ Off

PDF417 On (Default)

PDF417 Off

Inverse PDF417

Only Decode Regular PDF417 (Default)

Decode Both Regular and Inverse PDF417

Micro PDF417

Micro PDF417 On

Micro PDF417 Off（Default）

Aztec Code

On

Off（Default）

Inverse Aztec Code

On

Off（Default）

Mirror Aztec Code

Only Decode Regular Aztec Code（Default）

Only Decode Mirror Aztec Code

Decode Both Regular and Mirror Aztec Code

HANXIN

HANXIN On

HANXIN Off（Default）

Dot Code

On

Off（Default）

Inverse Dot Code

On

Off (Default)

Grid Matrix

Grid MatrixOn

Grid Matrix Off (Default)

Hong Kong 2 of 5(China Post)

Hong Kong 2 of 5(China Post) On

Hong Kong 2 of 5(China Post) Off (Default)

NEC 2 of 5

NEC 2 of 5 On

NEC 2 of 5 Off (Default)

Telepen

Telepen On

Telepen Off (Default)

Maxicode

Maxicode Encode Format is from mode0 to mode6, Mode 4 is suggested.

Maxicode On

Maxicode Off (Default)

Straight 2 of 5 IATA

Straight 2 of 5 IATA On

Straight 2 of 5 IATA Off (Default)

Appendix

Appendix 1 Data and Digit Barcodes

	0
1	
	2
3	
	4
5	
	6
7	

	8
9	
	A
B	
	C
D	
	E
F	
	Cancel Last String

Cancel Current Setting	
	Cancel Last Scanning
Save	

Appendix 2 Symbologies Table

Barcode Type	Code ID		AIM ID	
	HEX	Char	Char	Restricted parameters
Codabar	0x61	a	]Fm	0,1
Code 11	0x68	h	]Hm	0,1,3
GS1 128	0x49	I	]C1	
Code 128（ISBT 128）	0x6a	j	]Cm	0,1,2,4
Code 32	0x3c	<	]X0	
Code 39	0x62	b	]Am	0,1,3,4,5,7
Code 93	0x69	i	]Gm	0-9,A-Z,a-m
Trioptic Code 39	0x3d	=	]X0	
EAN-13（ISBN）	0x64	d	]Em	0,3
EAN-8	0x44	D	]Em	3,4
GS1 DataBar（GS1 DataBar Stacked）	0x79	y	]em	0
GS1 DataBar Limited	0x7b	{	]em	
GS1 DataBar Expanded	0x7d	}	]em	
Interleaved 2 of 5	0x65	e	]Im	0,1,3
Matrix 2 of 5	0x6d	m	]X0	
Industrial 2 of 5	0x66	f	]S0	
Straight 2 of 5 IATA	0x66	f	]Rm	0,1,3
Hong Kong 2 of 5（China post）	0x51	Q	]X0	
NEC 2 of 5	0x59	Y	]X0	
Telepen	0x74	t	]Bm	
MSI	0x67	g	]Mm	0,1

UPC-A	0x63	c	]Em	0,3
UPC-E	0x45	E	]Em	0,3
UPC-E1	0x45	E	]X0	
Aztec Code	0x7a	z	]zm	0-9,A-C
HANXIN	0x48	H	]X0	
Maxicode	0x78	x	]Um	0-3
DOT Code	0x2e	.	]X0	
Grid Matrix Code	0x58	X	]X0	
Codablock F	0x71	q	]Om	0,1,4,5,6
Data Matrix	0x77	w	]dm	0-6
Micro PDF417	0x72	R	]Lm	3,4,5
PDF417	0x72	r	]Lm	0-2
QR (Micro QR)	0x73	s	]Qm	0-6

Appendix3 Control Escape Character

Decimal	ASCII	Control + ASCII Mode	Alt + Keypad Mode
1	SOH (Start of Header)	Ctrl+A	Alt+001
2	STX (Start of Text)	Ctrl+B	Alt+002
3	ETX (End of Text)	Ctrl+C	Alt+003
4	EOT (End of Transmission)	Ctrl+D	Alt+004
5	ENQ (Enquiry)	Ctrl+E	Alt+005
6	ACK (Acknowledgment)	Ctrl+F	Alt+006
7	BEL (Bell)	Ctrl+G	Alt+007
8	BS (Backspace)	Back Space	Alt+008
9	HT (Horizontal Tab)	Tab	Alt+009
10	LF (Line Feed)	Ctrl+P	Alt+010
11	VT (Vertical Tab)	Ctrl+Q	Alt+011
12	FF (Form Feed)	Ctrl+R	Alt+012
13	CR (Carriage Return)	Enter	Alt+013
14	SO (Shift Out)	Ctrl+N	Alt+014
15	SI (Shift In)	Ctrl+O	Alt+015
16	DLE (Data Link Escape)	Ctrl+P	Alt+016
17	DC1 (XON) (Device Control 1)	Ctrl+Q	Alt+017
18	DC2 (Device Control 2)	Ctrl+R	Alt+018
19	DC3 (XOFF) (Device Control 3)	Ctrl+S	Alt+019
20	DC4 (Device Control 4)	Ctrl+T	Alt+020
21	NAK (Negative Acknowledgement)	Ctrl+U	Alt+021
22	SYN (Synchronous Idle)	Ctrl+V	Alt+022
23	ETB (End of Trans. Block)	Ctrl+W	Alt+023
24	CAN (Cancel)	Ctrl+X	Alt+024
25	EM (End of Medium)	Ctrl+Y	Alt+025
26	SUB (Substitute)	Ctrl+Z	Alt+026
27	ESC (Escape)	Ctrl+[	Alt+027
28	FS (File Separator)	Ctrl+\	Alt+028
29	GS (Group Separator)	Ctrl+]	Alt+029
30	RS (Request to Send)	Ctrl+^	Alt+030
31	US (Unit Separator)	Ctrl+_	Alt+031

Appendix 4 ASCII Table

(The characters in yellow background is control characters. The characters in white background is visible characters.)

Binary	Decimal	Hexadecimal	Char
0	0	0	NUL (NULL)
1	1	1	SOH (Start Of Headling)
10	2	2	STX (Start Of Text)
11	3	3	ETX (End Of Text)
100	4	4	EOT (End Of Transmission)
101	5	5	ENQ (Enquiry)
110	6	6	ACK (Acknowledge)
111	7	7	BEL (Bell)
1000	8	8	BS (Backspace)
1001	9	9	HT (Horizontal Tab)
1010	10	0A	LF/NL(Line Feed/New Line)
1011	11	0B	VT (Vertical Tab)
1100	12	0C	FF/NP (Form Feed/New Page)
1101	13	0D	CR (Carriage Return)
1110	14	0E	SO (Shift Out)
1111	15	0F	SI (Shift In)
10000	16	10	DLE (Data Link Escape)
10001	17	11	DC1/XON (Device Control 1/Transmission On)
10010	18	12	DC2 (Device Control 2)
10011	19	13	DC3/XOFF (Device Control 3/Transmission Off)
10100	20	14	DC4 (Device Control 4)
10101	21	15	NAK (Negative Acknowledge)
10110	22	16	SYN (Synchronous Idle)
10111	23	17	ETB (End of Transmission Block)

11000	24	18	CAN (Cancel)
11001	25	19	EM (End of Medium)
11010	26	1A	SUB (Substitute)
11011	27	1B	ESC (Escape)
11100	28	1C	FS (File Separator)
11101	29	1D	GS (Group Separator)
11110	30	1E	RS (Record Separator)
11111	31	1F	US (Unit Separator)
100000	32	20	(Space)
100001	33	21	!
100010	34	22	"
100011	35	23	#
100100	36	24	$
100101	37	25	%
100110	38	26	&
100111	39	27	'
101000	40	28	(
101001	41	29	)
101010	42	2A	*
101011	43	2B	+
101100	44	2C	,
101101	45	2D	-
101110	46	2E	.
101111	47	2F	/
110000	48	30	0
110001	49	31	1
110010	50	32	2
110011	51	33	3
110100	52	34	4
110101	53	35	5
110110	54	36	6
110111	55	37	7
111000	56	38	8
111001	57	39	9
111010	58	3A	:
111011	59	3B	;
111100	60	3C	<
111101	61	3D	=

111110	62	3E	>
111111	63	3F	?
1000000	64	40	@
1000001	65	41	A
1000010	66	42	B
1000011	67	43	C
1000100	68	44	D
1000101	69	45	E
1000110	70	46	F
1000111	71	47	G
1001000	72	48	H
1001001	73	49	I
1001010	74	4A	J
1001011	75	4B	K
1001100	76	4C	L
1001101	77	4D	M
1001110	78	4E	N
1001111	79	4F	O
1010000	80	50	P
1010001	81	51	Q
1010010	82	52	R
1010011	83	53	S
1010100	84	54	T
1010101	85	55	U
1010110	86	56	V
1010111	87	57	W
1011000	88	58	X
1011001	89	59	Y
1011010	90	5A	Z
1011011	91	5B	[
1011100	92	5C	\
1011101	93	5D	]
1011110	94	5E	^
1011111	95	5F	_
1100000	96	60	`
1100001	97	61	a
1100010	98	62	b
1100011	99	63	c

1100100	100	64	d
1100101	101	65	e
1100110	102	66	f
1100111	103	67	g
1101000	104	68	h
1101001	105	69	i
1101010	106	6A	j
1101011	107	6B	k
1101100	108	6C	l
1101101	109	6D	m
1101110	110	6E	n
1101111	111	6F	o
1110000	112	70	p
1110001	113	71	q
1110010	114	72	r
1110011	115	73	s
1110100	116	74	t
1110101	117	75	u
1110110	118	76	v
1110111	119	77	w
1111000	120	78	x
1111001	121	79	y
1111010	122	7A	z
1111011	123	7B	{
1111100	124	7C	|
1111101	125	7D	}
1111110	126	7E	~
1111111	127	7F	DEL (Delete)

Appendix 5 Code ID Table

Barcode Type	Setting Barcodes
EAN-13（ISBN）	
Codablock F	
EAN-8	
UPC-A	
UPC-E	
Code 128（ISBT 128）	
GS1-128	
Code 39	
Code 32	
Trioptic Code 39	
Code 93	

Codabar	
Interleaved 2 of 5	
Industrial 2 of 5（Straight 2 of 5 IATA）	
Matrix 2 of 5	
Code 11	
MSI-Plessey	
RSS14（GS1 DataBar Stacked）	
RSS-Limited	
RSS-Expaned	
QR(Micro QR)	
Data Matrix	
PDF417	

Micro PDF417	
Aztec Code	
HANXIN	
Maxicode	
Dot Code	
Grid Matrix	
Hong Kong 2 of 5 (China Post)	
NEC 2 of 5	
Telepen	

Appendix 6 Prefix/Suffix Control Character Table

Note: Prefix and suffix control characters are not affected by "Control + ASCII mode" and "Alt + Keypad mode".

Decimal	ASCII	Control Character
1	SOH (Start of Header)	Null
2	STX (Start of Text)	Home
3	ETX (End of Text)	End
4	EOT (End of Transmission)	Null
5	ENQ (Enquiry)	Null
6	ACK (Acknowledgment)	Null
7	BEL (Bell)	Null
8	BS (Backspace)	Null
9	HT (Horizontal Tab)	Tab
10	LF (Line Feed)	Down Arrow
11	VT (Vertical Tab)	Null
12	FF (Form Feed)	Null
13	CR (Carriage Return)	Enter
14	SO (Shift Out)	Null
15	SI (Shift In)	Null
16	DLE (Data Link Escape)	Null
17	DC1 (XON) (Device Control 1)	Null
18	DC2 (Device Control 2)	Null
19	DC3 (XOFF) (Device Control 3)	Null
20	DC4 (Device Control 4)	Null
21	NAK (Negative Acknowledgement)	Null
22	SYN (Synchronous Idle)	Null
23	ETB (End of Trans. Block)	Null
24	CAN (Cancel)	Null
25	EM (End of Medium)	Null
26	SUB (Substitute)	Null
27	ESC (Escape)	Null
28	FS (File Separator)	Null
29	GS (Group Separator)	Null
30	RS (Request to Send)	Null
31	US (Unit Separator)	Null

Symbologies	Code ID		AIM ID
	HEX	Cha	ID
All Symbologies	0x99		
Codabar	0x61	a	]F0
Code 11	0x68	h	]H1
Code 128(Including GS1 128)、GS1-128	0x6A	j	]C0
ISBT 128	0x6A	j	]C0
Code 32	0x3C	<	]X0
Code 39	0x62	b	]A0
Code 93	0x69	i	]G0
EAN			
EAN-13(including ISBN)	0x64	d	]E0
EAN-8	0x44	D	]E4
GS1			
GS1 DataBar	0x79	y	]e0
GS1 DataBar Limited	0x7B	{	]e0
GS1 DataBar Expanded	0x7D	}	]e0
2 of 5			
Interleaved 2 of 5	0x65	e	]I0
Matrix 2 of 5	0x6D	m	]X0
Straight 2 of 5 Industrial	0x66	f	]S0
MSI	0x67	g	]M1

UPC			
UPC-A	0x63	c	]E0
UPC-E	0x45	E	]E0
Aztec Code	0x7A	z	]z0
Han Xin	0x48	H	]X0
Codablock F	0x6A	j	]C0
Data Matrix	0x77	w	]d1
PDF417、Micro PDF417	0x72	r	]L0
QR、Micro QR	0x73	s	]Q1

YidaScan

Thank you for your viewing!